HSF Pb RoHS

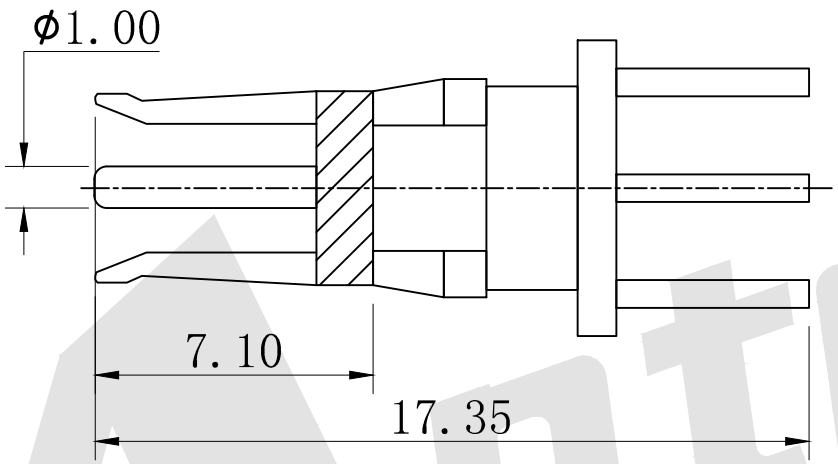

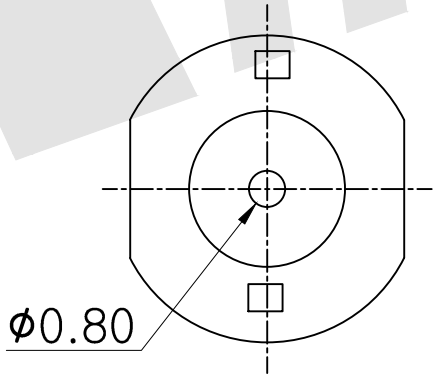

ELECTRICAL:

Contact Current Rating:5AMP Max
insulation Resistance:5000 Megohms Minimum at DC 500V.
Dielectric Withstanding Voitage:AC 1000V r.m.s.
Impedance Date:75Ω

MATERIALS:

Shell:Brass.
Housing:Teflon.
Ordering Code:

CP11F - 12 - X
① ②

① Series

② Contact Plating:

G0: Gold flash	G1: 3u″ Gold
G2: 5u″ Gold	G3: 10u″ Gold
G4: 15u″ Gold	G5: 30u″ Gold

REV	DESCRIPTION	DATE

Unless Otherwise specified tolerance
X.±0.35 X.XX:±0.20
X.X:±0.25 X.XXX:±0.15

SCALE: As Shown	UNIT: mm
DRAW Lv Xun Hua	DATE 29/04/2019
CHECK BobYang	DATE 29/04/2019

3rd ANGLE PROJECTION

ANTENK ELECTRONICS CO,.LTD
Http://www.antenk.com
E-mail:sales@antenk.com

TITLE: SIGNAL PIN STRAIGHT FEMALE CONTACT 75Ω (work in coaxial)

DRAWING NO: CP11F-12X

PRODUCT NO: CP11F-12X