HSF Pb RoHS

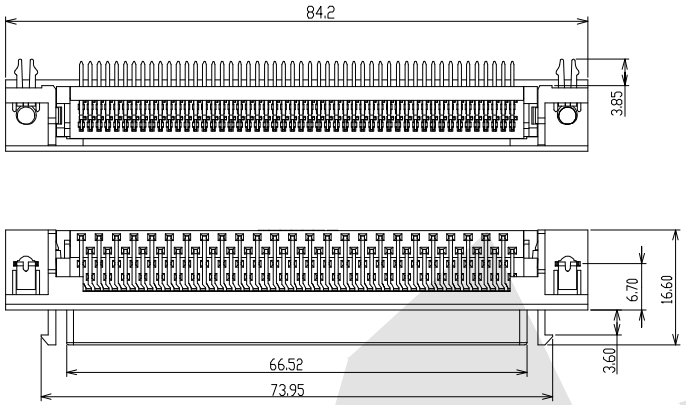

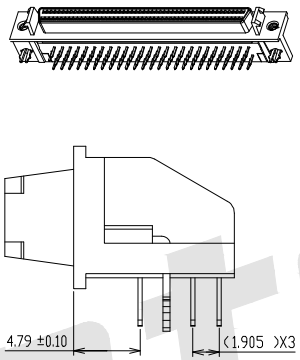

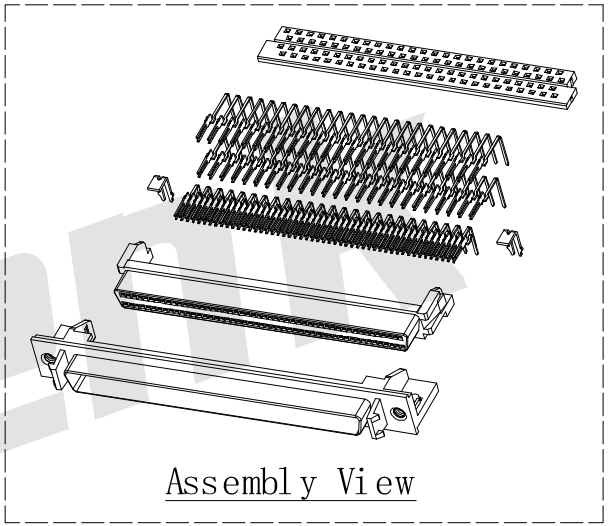

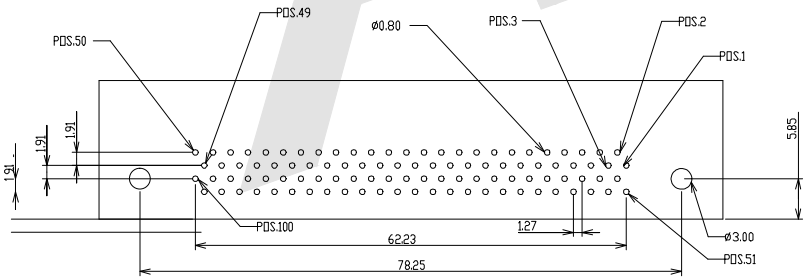

Recommended PCB Layout

SPECIFICATIONS:

1. Electrical Characteristics:
   1.1 Contact Current Rate: 1AMP
   1.2 Insulation Resisitance: 500MΩ Minimum
   1.3 Contact Resistance: 35MΩ Maximum
   1.4 Dielectric Voltage: 500V AC For One Minute
2. Material:
   2.1 Insulator: Thermoplastic Polyester, PBT UL 94V-0
   2.2 Contact: Copper Alloy
3. Finish
   3.1 Zincshell: Nickel Plated Over Copper
   3.2 Contact: Gold Plating
   3.3 Board Lock: Tin Plated Over Copper
4. Environment:
   Operation Temperature: -55° C To +105° c

Ordering Code:

HPDBR - F - 100 - X - X - X
① ② ③ ④ ⑤ ⑥

① Series No:

② Contact Type:
F: Female

③ Contact NO.:
100=100P

④ Threaded Finishes:
1: Threaded Insert #2-56
2: Threaded Insert #4-40
3: Threaded Insert M2.6

⑤ Contact Plating:
S0: Gold Flash Selective Plating
S2: 5u″ Gold Selective Plating
S4: 15u″ Gold Selective Plating
S5: 30u″ Gold Selective Plating

⑥ Bracket Finishes:
L: Latch Bracket
S: Screw Bracket

REV	DESCRIPTION	DATE

Unless Otherwise specified tolerance
X. ±0.35 X.XX: ±0.20
X.X: ±0.25 X.XXX: ±0.15

SCALE: As Shown	UNIT: mm
DRAW Jack Bao	DATE 9/02/2018
CHECK Bob Yang	DATE 9/02/2018

3rd ANGLE PROJECTION

ANTENK ELECTRONICS CO,.LTD
Http://www.antenk.com
E-mail:sales@antenk.com

TITLE: 1.27mm Series 100P Receptacle Headers Right-Angle Mount Pin Type

DRAWING NO: HPDBR-F100XXX

PRODUCT NO: HPDBR-F100XXX